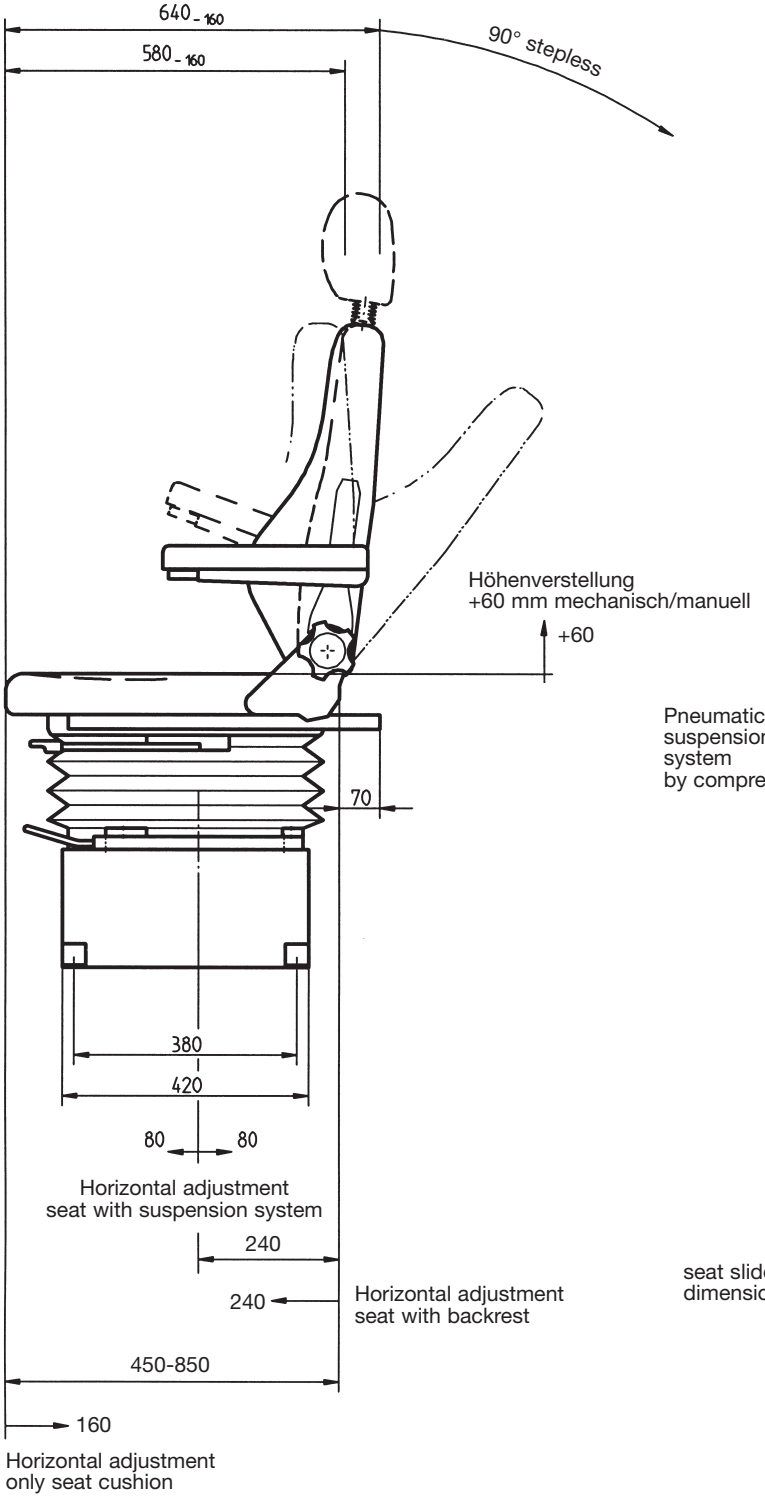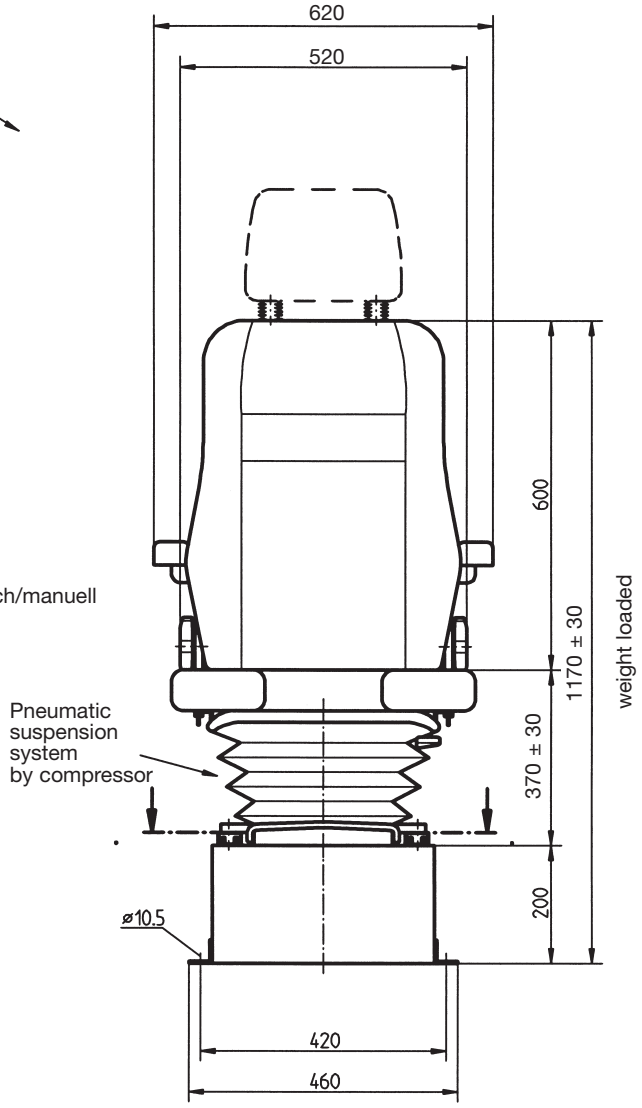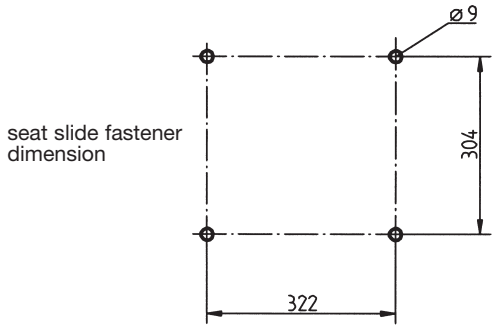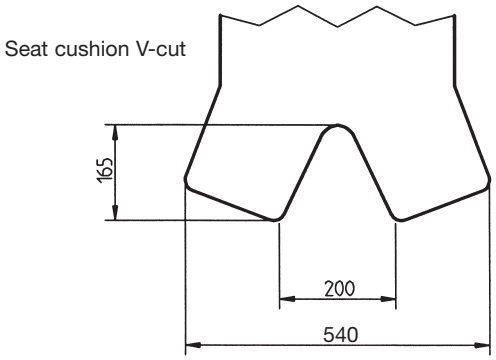Driver's seat KFS 10